PO.256

LiDAR assisted model predictive control of a next generation wind turbine for tower fatigue load reduction and improved speed control

Avishek A. Kumar, Patrick J. Rainey, and Ervin A. Bossanyi
DNV GL Energy

BACKGROUND AND CONTRIBUTIONS

The introduction of turbine-mountable, LIDAR-based, wind-field sensing-technology has prompted investigation into methods of leveraging this new data to improve turbine controller performance. Key metrics targeted for improvement are tower loading, speed control and pitch actuator usage, all of which can translate to reduced costs-of-energy.

Model Predictive Control (MPC) is a candidate method to utilise future wind speed data whilst controlling for multiple control objectives [1]. The optimisation can include system constraints, system nonlinearities, simultaneously control multiple actuators to achieve multiple control objectives and incorporate disturbance information such as that supplied by LIDAR; making this control framework extremely relevant to the wind turbine application.

MPC methods utilising future disturbance information have been investigated, showing reductions in extreme and fatigue loading and an increase in generator speed control performance [2, 3]. Although these studies indicate promising results, they are often obtained relative to a simple baseline controller and do not test the robustness of the methods in the presence of sensor noise and delays – both key concerns for commercial deployment.

We present comparisons of MPC controller performance against that of a classically designed state-of-the-art baseline controller [4]. The MPC controller is compared without LIDAR feedback, with "perfect" LIDAR feedback and with realistic LIDAR feedback. Comparisons are made in simulation using a 7MW next-generation wind turbine model [4] in *Bladed.*

Key features of this investigation are:

- Realistic LIDAR measurements;
- Inclusion of signal delay and noise from all turbine measurements;
- The use of an Unscented Kalman Filter (UKF) for state estimation; and
- Short prediction horizons to reduce computational burden.

MODEL PREDICTIVE CONTROL

MPC controllers perform online optimisations on a system model to calculate control actions that minimise a given cost-function. The cost-function is constrained by the modelled system dynamics and system constraints. Several features of MPC make it a suitable candidate for wind turbine control.

Integrated multi-input multi-output (MIMO) design.

- Typical wind turbine control requires the use of both the blade pitch and generator torque actuators to control for multiple objectives such as generator speed control and tower damping.
- MPC can centrally control both actuators for all modelled control objectives with a single controller synthesis procedure.

The ability to maintain stability in the presence of system constraints.

- Turbine actuators are also subject to constraints such as blade pitch position, velocity and acceleration as well as generator torque levels.

The ability to maintain stability in the presence of system nonlinearities and remain robust to un-modelled system dynamics.

- The wind turbine system is complex and nonlinear; there are significant sources of model uncertainty and high order models are required to accurately represent the system, requiring controllers to be robust to uncertainties and to system nonlinearities.

The ability to utilise disturbance information to increase control performance.

- Information from LIDAR can be utilised to increase controller performance.

For this investigation the MPC implementation has the following parameters and features:

- Constraints on the generator torque demand levels and blade pitch angle demand position, velocity and acceleration;
- Future rotor averaged wind speed (RAWS) information reconstructed from LIDAR line-of-sight measurements;
- Focus on generator speed and control and tower fore-aft damping.;
- Square Root Unscented Kalman Filter for state estimation;
- Closed loop paradigm using a Linear Quadratic Regulator (LQR) for pre-stabilisation;
- Offset-free control (for generator speed trajectory tracking without integration)
- Prediction horizon of 0.6s;

The final MPC control structure can be seen in Fig. 1 and can be compared to a state-of-the-art baseline controller structure shown in Fig. 2.

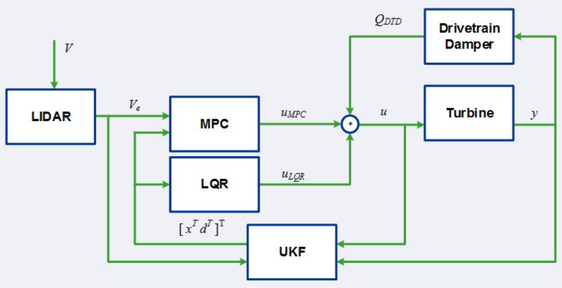

Figure 1 MPC Controller schematic

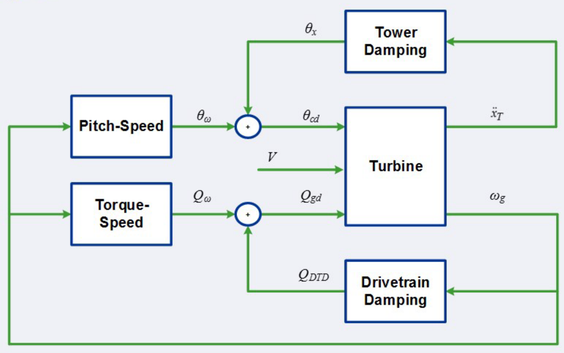

Figure 2 Baseline controller schematic

MODEL DESCRIPTION

A five degree-of-freedom linear-parameter-varying model, scheduled with the RAWS, is used for controller synthesis, online optimisation and state estimation. The model includes dynamics for tower fore-aft motion, drivetrain torsion, rotor speed, torque actuation and blade pitch actuation. The model allows for generator torque demand, blade pitch angle and RAWS. Noisy and delayed measurements for the generator speed and nacelle fore-aft acceleration are provided to the controller.

The LIDAR feedback is provided by a nacelle-mounted, continuous-wave, single-beam LIDAR model. The model assumes a circular scan pattern with 50 points, a sample time of 0.02 s and has a typical continuous wave LIDAR weighting function applied [5]. The focus distance is set to 110 m with a beam half-angle of 30° giving 69% rotor diameter coverage. LIDAR measurements are taken from a wind-field that is modelled with evolving turbulence, adding some error to LIDAR measurements.

RESULTS

Simulations were conducted with a high fidelity model of the turbine in *Bladed.* The model contained 7 tower modes, 6 modes for each blade, a drivetrain torsional mode, pitch/torque actuator dynamics and measurement dynamics (Table 1).

Environmental conditions were applied according to IEC 61400-3 3rd Edition standards for normal turbulence with a mean wind speed of 16 ms^{-1}, and for LIDAR assisted simulations, evolving turbulence was enabled. In the ideal LIDAR case, the pre-calculated RAWS was utilised directly.

Performance relative to the baseline controller are given in Table 2MPC without LIDAR was initially tuned to have similar performance to the baseline controller for a fair comparison. LIDAR feedback was then added with no additional tuning to see the impact of the additional measurements. Results are summarised in Table 2.

The additional LIDAR measurement gives a clear benefit to generator speed control, achieving a 44% reduction in speed standard deviation relative to MPC levels and a 4% reduction in tower base fore-aft damage equivalent loading (DEL); all achieved with similar pitch travel to MPC levels. This gives significant scope to detune the speed control objective and allow more emphasis on load reduction or pitch duty reduction.

Using perfect LIDAR measurements we can see further performance increase across all metrics, which indicates value in development of more accurate RAWS reconstruction methods.

Table 1 Measurement signal parameters

Signal	ω_g	$\ddot{x}_T$	θ_c	Q_g	θ_{cd}	Q_{gd}
Rectangular Half-Width Noise Level	0.45 rpm	0.005 ms^{-2}	0.1°	3500 Nm	0` Nm	0 Nm
Delay	0.02 s	0.02 s	0.02 s	0.02 s	0.04 s	0.06 s

Table 2 Controller performance relative to baseline controller

Controller	Std. Dev. Generator Speed	Tower Base Fore-Aft DEL	Pitch Travel
MPC	106%	97%	100%
MPC + LIDAR	59%	93%	100%
MPC + Ideal LIDAR	53%	87%	90%

CONCLUSIONS

MPC control with and without LIDAR feedback has been successfully applied to a next generation wind turbine in above rated conditions with realistic measurement characteristics. MPC performance was first tuned to match that of a state-of-the-art optimised baseline controller. Providing realistic LIDAR feedback to the MPC controller showed significant improvements in speed control and tower load reduction. MPC with ideal LIDAR measurements indicates that further performance improvements, including reduced pitch travel, can be gained with more sophisticated processing and accurate measurements. Reduced pitch usage, decreased tower fatigue loading and improved speed control can allow further design optimisations, resulting in reduced costs of energy.

REFERENCES

[1] D. Q. Mayne, et. al., "Constrained model predictive control: Stability and optimality," *Automatica*, vol. 36, pp. 789–814, 2000.

[2] A. A. Kumar, "Multivariable Control of Wind Turbines for Fatigue Load Reduction in the Presence of Nonlinearities," PhD thesis, The University of Auckland, Auckland, 2011.

[3] M. Mirzaei and M. Soltani, "Model predictive control of wind turbines using uncertain LIDAR measurements," in *American Control Conference*, 2013.

[4] J. Dobbin et. al ., "Fully Integrated Design: Lifetime Cost of Energy Reduction for Offshore Wind," in *Proceedings of the Twenty-fourth (2014) International Ocean and Polar Engineering Conference*, 2014.

[5] E. Simley et. al., "Analysis of Wind Speed Measurements using Continuous Wave LIDAR for Wind Turbine Control," *Aerosp. Sci. Meet.*, no. January, pp. 1–16, 2011.