PO260.pdf 1 24/10/2015 06:18:55

PO.260

Advantages of ac-ac power converters based on ANPC topology for wind applications

L. Caballero[1] (luis.caballero-diaz@power.alstom.com), S. Rates[1] (sergi.rates-palau@power.alstom.com), O. Caubet[1] (oriol.caubet@power.alstom.com), S. Busquets-Monge[2] (sergio.busquets@upc.edu)
[1]Alstom Renewable Power (Spain)
[2] Technical University of Catalonia (Spain)

Abstract

The most accepted ac-ac power converter for wind energy conversion systems (WECS) is the conventional two-level back-to-back (2L-B2B). However, 2L-B2B is expected not to provide an acceptable performance for larger offshore WECS with the available switching devices.

Therefore, the wind market is open for the multilevel power converters, among which three-level neutral-point-clamped (3L-NPC) topology is achieving great interest in wind market. **3L-NPC enables great improvements compared to 2L-B2B**, but it provides some intrinsic drawbacks as the **uneven power losses distribution**.

Lately some investigations **([1], [2], [3])** have been focused on analyzing the three-level active neutral-point-clamped (3L-ANPC) which provides enhanced features compared to the 3L-NPC thanks to replace the clamping diodes by bidirectional switching devices. Thus, **3L-ANPC can be seen as the natural evolution of the 3L-NPC.**

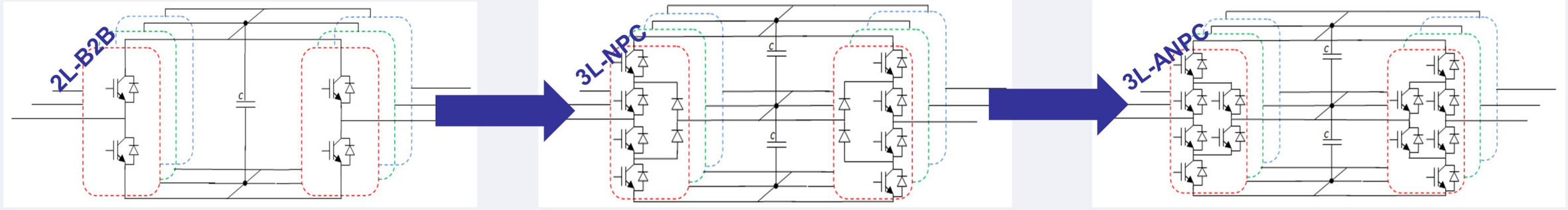

3L-NPC vs 3L-ANPC Comparison

3L-NPC only offers one switching state for each dc-link connection and so the power losses distribution cannot be controlled. Instead, **3L-ANPC** offers several switching states for each dc-link connection enabling an **enhanced power losses distribution.**

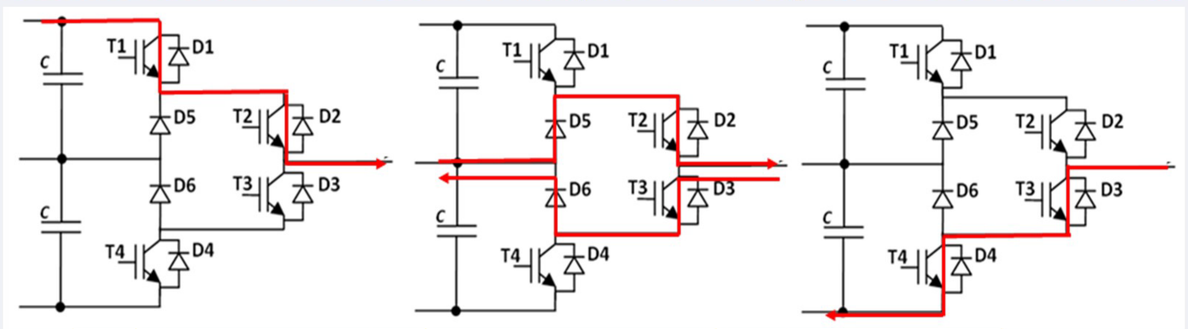

	Connection to positive voltage level	Connection to neutral point	Connection to negative voltage level
T1	ON	-	-
T2	ON	ON	-
T3	-	ON	ON
T4	-	-	ON

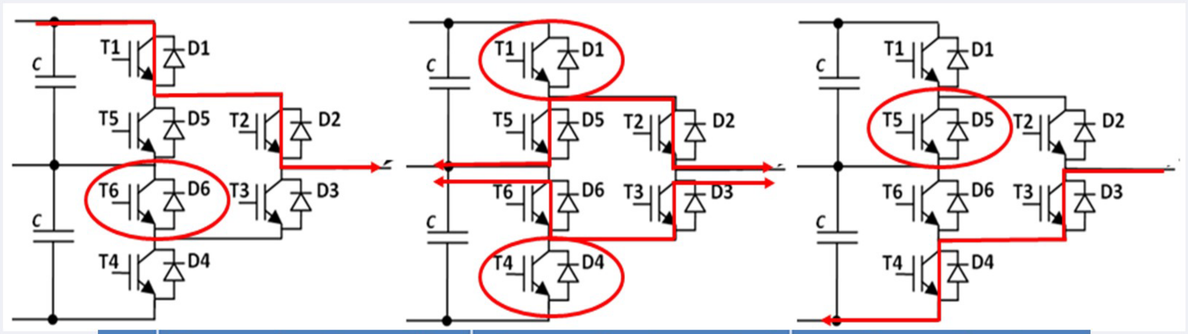

	Connection to positive voltage level		Connection to neutral point					Connection to negative voltage level	
T1	ON	ON	-	-	-	-	ON	-	-
T2	ON	ON	ON	ON	ON	-	-	-	-
T3	-	-	ON	-	-	ON	ON	ON	ON
T4	-	-	-	-	ON	-	-	ON	ON
T5	-	-	ON	ON	ON	-	-	ON	-
T6	ON	-	ON	-	-	ON	ON	-	-

Simulation Results

Two operating points (*Op P1* and *Op P2*) of a **3 MVA Direct Drive WECS** have been simulated using Matlab/PLECS. Moreover, the lifetime estimation is calculated from the maximum junction temperature (T_{jMAX}) and the maximum thermal cycling (ΔT_{jMAX}).

The 3L-ANPC is controlled as follows:

- 33% corresponds to type 3 commutations **[1]**
- 66% corresponds to multilevel active clamped (MAC) operating principle **[3]**

WECS DATA	
Apparent power	3 MVA
dc-link voltage	1500 V
RMS current	2000 A
Modulation index	1
Switching frequency	3750 Hz
Ambient temperature	50 ºC
Switching devices	FZ3600R12HP4
Manufacturer	Infineon
Modulation strategy	[4]

OPERATING POINT DATA		
Operating point	Op P1	Op P2
Converter mode	Rectifier	Inverter
Frequency	10 Hz	50 Hz
Power factor	0.8	1

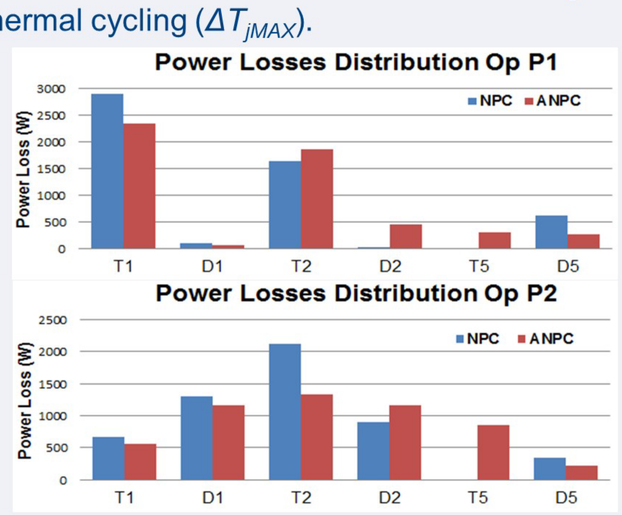

$$Ncycles = 1.017^{(125-T_{jMAX})^{1.16}} \times 8.2 \times 10^{14} \times \Delta T_{jMAX}^{-5.28} \quad [5]$$

		3L-NPC	3L-ANPC	% Enhanced
Op P1	Max Power Losses in a device (W)	2895	2337	19,27
	Max Temp Increase	75	66,5	11,33
	Max Thermal Cycling	9,1	7,6	16,48
	Milions of Cycles	7073	21848	208,89
Op P2	Max Power Losses in a device (W)	2119	1334	37,05
	Max Temp Increase	70	66,2	5,43
	Max Thermal Cycling	25,5	23,6	7,45
	Milions of Cycles	34	57	66,74

Conclusions

- **The introduction of the 3L-NPC in large WECS has entailed a great performance increase compared to 2L-B2B**. However, this paper analyses the use of the **3L-ANPC** in WECS as the **natural evolution of the 3L-NPC**, in order to mitigate some drawbacks of the 3L-NPC.
- The **3L-NPC** does not offer controllability to distribute the power losses among the power semiconductors. This **leads to an uneven thermal performance**, concentrating high power losses in some devices, **limiting the WECS output power and risking the reliability of the whole system.** Instead, the **3L-ANPC** offer some level of controllability to **avoid focusing high power losses in some devices**, replacing the clamping diodes by bidirectional switches.
- A 3 MVA Direct Drive WECS has been simulated **obtaining improvements between 5,5% and 16,5% of the thermal performance**, which, in turn**, extends the lifetime of the most critical device between 66% and 208%**, depending on the operating point.

References

1. T. Brückner, S. Bernet and H. Güldner. “The Active NPC Converter and Its Loss-Balancing Control”. IEEE Transactions on Industrial Electronics, vol. 52, no 3, pp 855-868, June 2005.
2. Y. Jiao and F. Lee. “ New Modulation Scheme for Three-Level Active Neutral-Point-Clamped Converter With Loss and Stress Reduction”. IEEE Transactions on Industrial Electronics, vol. 62, pp 5468-5479, September 2015.
3. S. Busquets-Monge and J. Nicolas-Apruzzese, "A Multilevel Active-Clamped Converter Topology Operating Principle". IEEE Transactions on Industrial Electronics, vol. 58, pp 3868-3878, September 2011.
4. S. Busquets-Monge, J. Bordonau, D. Boroyevich, and S. Somavilla, "The nearest three virtual space vector PWM point balancing in the three-level NPC inverter". IEEE Power Electronics Letters, vol 2, pp. 11-15, 2004.
5. N. Kaminski. “Load-Cycle Capability of HiPacks”. In: Application Note 5SYA 2043-01. Sept. 2004, pp. 1–8.