PO.252

# Uncertainty associated with strain gauge measurements on wind turbines

**M.Bezziccheri[1], P.Castellini[1,2], P.Evangelisti[1,2], C.Santolini[1,2], N.Paone[1,2]**
Università Politecnica delle Marche, DIISM, Ancona, Italy
WEST-lab, Università Politecnica delle Marche, Ancona, Italy

## Abstract

The paper discusses the complexity of calibration of strain gage full bridges applied to measure mechanical loads in large wind turbines. In particular, it presents a generalized static-dynamic mechanical model which allows to calibrate the turbine using its own unbalanced masses and discusses the uncertainty associated to it by implementing a type B analysis of uncertainty, according to the ISO "Guide to the Expression of Uncertainty in Measurement". The paper comments on the attainable range of calibration as well as on the uncertainty, which is often larger than the target set by the standard IEC-61400-13. The effect of thermal effects on strain gage bridges is also discussed, which is an often neglected source of uncertainty; instead in large turbines and specific environmental and operating conditions it can be relevant. The possibility to compensate these thermal effects is presented.

## Objectives

The capacity of a wind turbine of successfully enter the market is strongly linked to its transformation efficiency and the respect of the technical characteristics declared. For turbine certification, measurements and analysis of moments on all components of the machine is necessary in order to make a comparison with the operating loads used in the design phase, IEC-61400-13. For each moment a full bridge has to be realized in the appropriate section of the machine. The main problems associated with such an approach are:

- it is very complex and sometimes impossible to directly apply known loads so to implement a proper sensor calibration, especially for large turbines;
- the influence of uneven thermal distributions may affect the output of a full bridge, therefore should be carefully considered, and eventually compensated.

Reaching the target uncertainty of ±6% at 95% confidence level for mechanical load measurements stated in the IEC-61400-13 is questionable if analytical calibration and unbalanced masses are used and thermal effects are neglected.

Given these considerations, the evaluation of the uncertainties inherent with the mechanical loads deserves specific attention. This paper therefore discusses the calibration method based on static and dynamic mechanical models and analyses the associated uncertainty, considering also thermal effects.

## Model for load sensor calibration through unbalanced masses of the turbine

### MODEL BASED CALIBRATION PROCESS

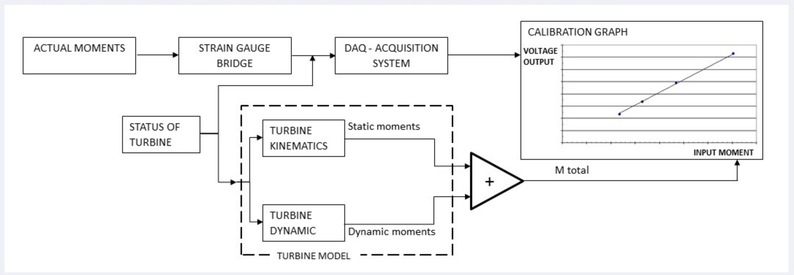


### SHAFT BENDING MOMENT

Known bending moments at the root of the blade can be generated by azimuth rotation (θ) of 360 ° .

$$Mtilt = C_{xy} \cdot \dot{\omega} + R_{xy} \cdot \dot{\omega} + C_{xz} \cdot \omega^2 + R_{xz} \cdot \omega^2 - EG_c \cdot g \cdot m_c \cdot cos(\alpha) \cdot cos(\Theta) - EG_r \cdot g \cdot m_r \cdot cos(\alpha) \cdot cos(\Theta)$$

$$Myaw = C_{xz} \cdot \dot{\omega} + R_{xz} \cdot \dot{\omega} - C_{xy} \cdot \omega^2 - R_{xy} \cdot \omega^2 + EG_c \cdot g \cdot m_c \cdot cos(\alpha) \cdot sin(\Theta) + EG_r \cdot g \cdot m_r \cdot cos(\alpha) \cdot sin(\Theta)$$

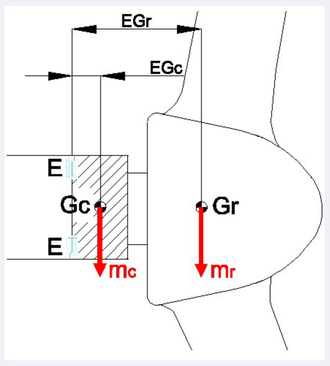


By inserting the hypothetical values for a machine 2 MW installed at a site of class II:

$$Mtilt_{max}(\Theta = 0) \cong 827[kNm]$$
$$Myaw_{max}(\Theta = 90) \cong 827[kNm]$$

This method can produce an input bending moment up to 25% of what expected in operation.

### BLADE BENDING MOMENT

Known bending moments at the root of the blade can be generated by azimuth rotation (θ) of 360 ° .

$$Mbll = AG_b \cdot m_b \cdot g \cdot [sin(\beta) \cdot (sin(\alpha) \cdot cos(\gamma) + cos(\alpha) \cdot cos(\Theta) \cdot sin(\gamma)) + cos(\alpha) \cdot cos(\beta) \cdot sin(\Theta)]$$

$$Mbf = AG_b \cdot m_b \cdot g \cdot [cos(\beta) \cdot (sin(\alpha) \cdot cos(\gamma) + cos(\alpha) \cdot cos(\Theta) \cdot sin(\gamma)) - cos(\alpha) \cdot sin(\beta) \cdot sin(\Theta)]$$

By inserting the hypothetical values for a machine 2 MW installed at a site of class II:

$$Mbll_{max}(\Theta = 0) = Mbf_{max}(\Theta = 90) \cong 1160[kNm]$$

This method can produce an input bending moment up to 70% and 35% of the moments Mbll e Mbf expected in operation.

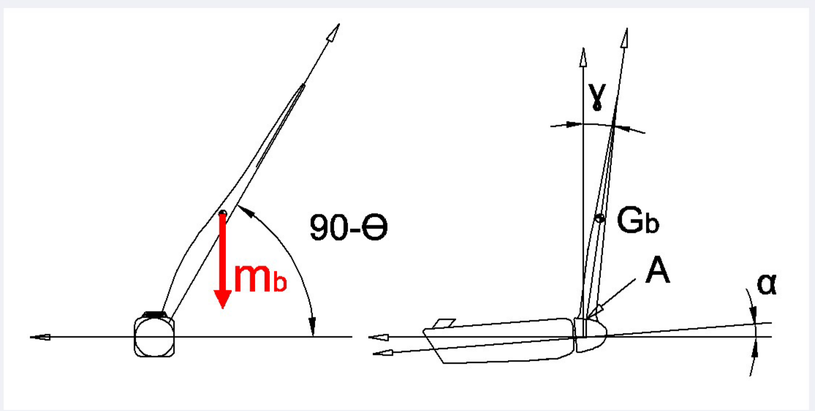


### TOWER BENDING MOMENT

Known bending moments at the tower can be generated by yaw rotation (ϕ) of 360 ° .

$$Mtn = -OG_n \cdot g \cdot m_n \cdot cos(\Phi)$$
$$Mttn = -OG_n \cdot g \cdot m_n \cdot cos(\Phi)$$
$$Mtl = -OG_n \cdot g \cdot m_n \cdot sin(\Phi)$$
$$Mttl = -OG_n \cdot g \cdot m_n \cdot sin(\Phi)$$

By inserting the hypothetical values for a machine 2 MW installed at a site of class II:

$$Mttn_{max}(\Phi = 0) = Mtn_{max}(\Phi = 0) \cong 255[kNm]$$
$$Mttl_{max}(\Phi = 90) = Mtl_{max}(\Phi = 90) \cong 255[kNm]$$

This method can produce load calibration very low (sometimes lower than 5%) of what expected in operation.

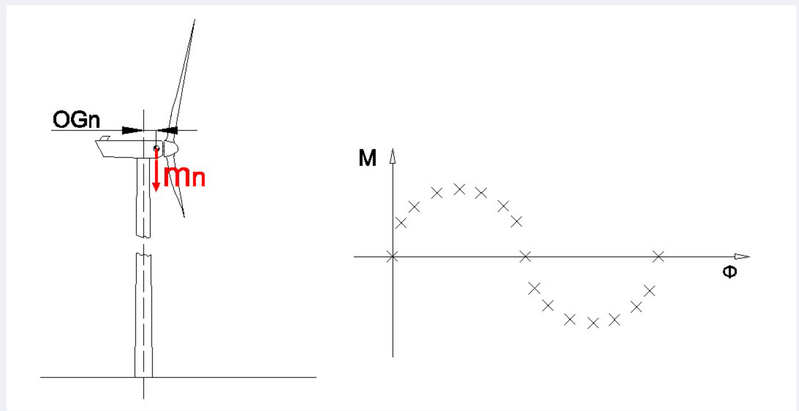


## Uncertainty of the calibration procedure

Parameters that influence the uncertainty:

1. Uncertainty associated with the input bending moments;
2. Uncertainty associated to the moment to strain relationships and strain to resistance;
3. Uncertainty of the Wheatstone full bridge;
4. Uncertainty associated to the DAQ;
5. Uncertainty associated with the thermal contribution.

Typically on a machine 2 MW, the calibration methods described above introduce a type B uncertainty comprised between ±5% to ±10% on the output of the bridge, without considering the possible thermal contributions.

### UNCERTAINTY ASSOCIATED WITH THE THERMAL CONTRIBUTION

The solar radiation and the contributions of thermal convection and radiation of the generator and of the power converters can produce apparent electrical voltages on the bending strain gauges on the tower top and on the tower base, which result in apparent moment.

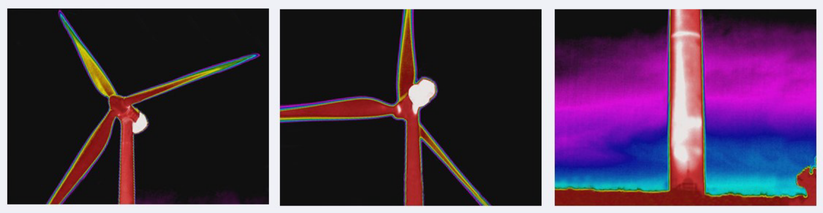

Assuming to use strain gauges compensated for steel, the typical error committed on a 2 MW machine neglecting the thermal contribution is:







At equal ΔT, the thermal effects on the composite material of the blade are one order of magnitude greater.

## Conclusions

Although the standard 61400-13 imposes a ±6% target at 95% confidence level, this value is difficult to achieve given the uncertain nature of the physical and geometric characteristics of the large turbines and the thermal influence on the results of the measurement. Since the wind turbine and its structural components are getting bigger, the mechanical calibration may not always be possible. As an alternative method is possible to provide the combined use of the mechanical calibration and electrical calibration (shunt). In these circumstances, the uncertainty on the output of the bridge will increase significantly moving away even more from the target value of ±6%.

## References

1. IEC/TS 61400-13:2001(E) Wind turbine generator systems, Part 13: Measurement of mechanical loads, 1st edition.
2. Bruhn O, Soeker H, Grapentin M, Braam H, Mouzakis F, Petersen SM, Kleinselbeck T, Oiz Vasquez A. MEASNET LOADS – Commenting IEC Dash-13, Presented at the 8th German Wind Energy Conference, DEWEK2006, 2006.
3. Holierhoek JG, Korterink H, van de Pieterman RP, Braam H, Rademakers LWMM, Lekou DJ, Hecquet T, Söker H. PROTEST - Recommended Practices for Measuring in Situ the„Loads" on Drive Train, Pitch System and Yaw System, http://www.protest-fp7.eu/publications/.
4. Lekou DJ, Mouzakis F. WT load measurement uncertainty: load-based versus analytical strain-gauge calibration method. J. Sol Energy Eng 2009; 131.011005-1-8.
5. Montero W, Farag R, Diaz V, Ramirez M, Boada. Uncertainties associated with strain gauge-measuring systems using resistance strain gauges. J. Strain Analysis Vol. 46 2010.
6. ISO/IEC Guide 98-3:2008 Uncertainty of measurement -- Part 3: Guide to the expression of uncertainty in measurement.