PO.236

Comparison of Feedback and Ideal and Realistic Lidar-Assisted Feedforward Individual Pitch Control

Svenja Wortmann[1], Florian Haizmann[2], Jens Geisler[3], Ulrich Konigorski[1]

[1] Technische Universität Darmstadt (TUDA), Control Systems and Mechatronics, Germany
[2] University of Stuttgart, Stuttgart Wind Energy (SWE), Germany, [3] Senvion GmbH, Hamburg

TECHNISCHE UNIVERSITÄT DARMSTADT
SENVION wind energy solutions
Universität Stuttgart

Abstract

Individual pitch control (IPC) for load reduction has been discussed for almost two decades [1]. Different feedback (FB) approaches dominate. Occasionally lidar-assisted feedforward (FF) IPC has been investigated in recent years [5-8].
Both IPC strategies need additional sensors in unequal price categories. For future industrial application a comparison of both strategies regarding their load reduction is of interest to evaluate whether the investment in a lidar system is worth its much higher price.

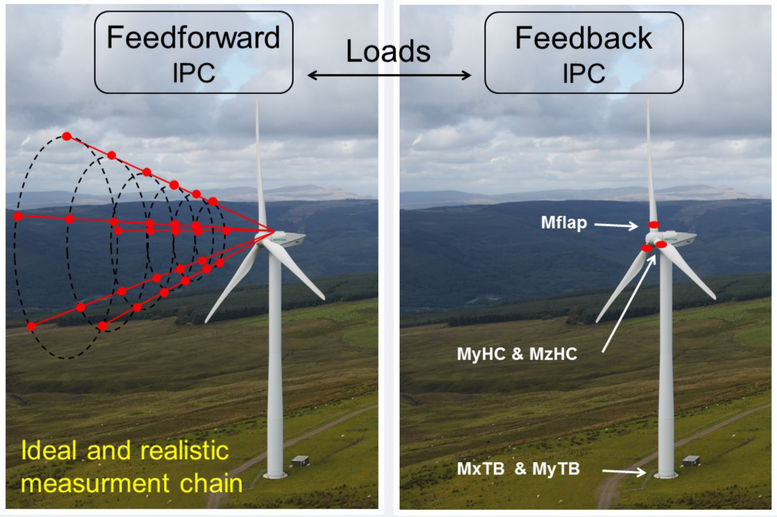

This paper provides a direct comparison of pure IPC FF and FB control strategies to reduce loads induced by the inhomogeneous wind field under realistic conditions. A lidar-assisted cyclic pitch FF control and a realistic and ideal measurement chain are presented. Simulation studies show the positive impact of ideal lidar measurements on load reductions. Under realistic conditions including a specific application-related lidar system loads decrease less and come closer to the level of the standard IPC feedback controller.

Lidar-Assisted Cyclic Pitch Feedforward Control

The inhomogeneous wind field is modelled by a horizontal mean wind speed v_0, a linear horizontal δ_H and a linear vertical shear δ_V as an average over the rotor or measuring area. A static compensation of the shear effects is designed.

Parametrization via a simplified model of turbine aerodynamics:
Optimal blade angles β_{opt} for each azimuth angle φ are determined by stationary simulations and simplified afterwards.

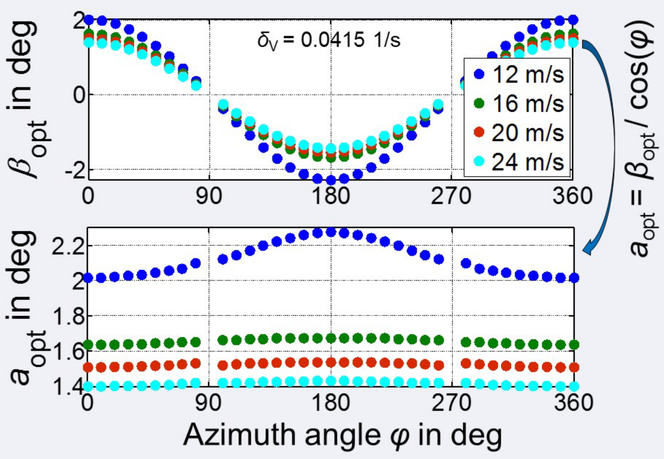

- Approximation with sinus acceptable
- Amplitude a_{opt} depends on v_0
- Identical results for δ_H and δ_V
- Linear correlation between δ_H or δ_V and a_{opt}
  → $c_{amp} = a_{opt} / \delta_H$

⇩

$$\beta_{FF} = \delta_V \cdot c_{amp}(v_0) \cdot \cos(\varphi) + \delta_H \cdot c_{amp}(v_0) \cdot \sin(\varphi)$$

Structure of the feedforward control loop:

- No FB IPC added to FF IPC
- FF IPC only used above rated wind speed
- Time shift T by predictive measurement
- Time shift $\hat{T} < T$ to compensate pitch dynamics and filtering

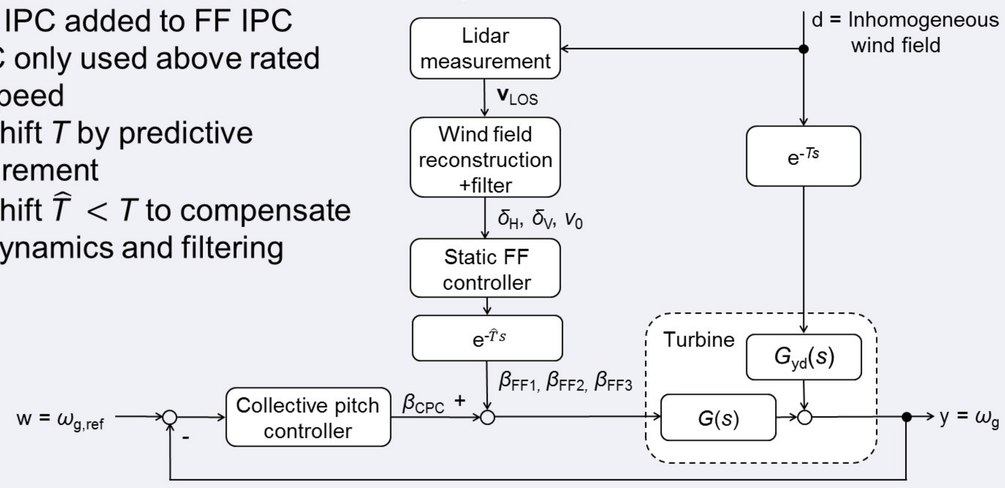

Realistic Lidar Measurement Chain

Lidar simulation:

- Volume measurement included
- Realistic measurement trajectory close to Wind Iris™:
  - 5 points on a circle
  - 6 simultaneous measurement distances
- Trajectory optimized by means of SWE's analytical model (AM) [9]
- Indirect accounting for wind evolution by filtering the reconstructed wind field characteristics with a first order Butterworth filter (BWF)
- Filter design via transfer function from rotor to lidar area derived by SWE's AM

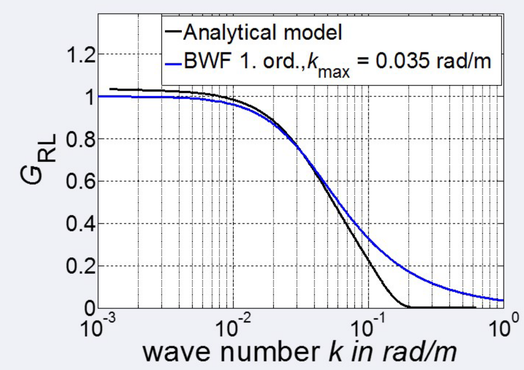

- Eliminates unrealistic high frequency fluctuations due to application of Taylor's hypothesis of frozen turbulence in simulation
- Eliminates frequencies that are not correlated for the specific rotor and lidar measurement configuration

Wind field reconstruction:

- Wind field reconstruction based on simulated line-of-sight wind speeds $\mathbf{v}_{LOS}$
- Neglecting yawed inflow

Ideal Lidar Measurement Chain

The wind field characteristics δ_H, δ_V, v_0 are unfiltered averages calculated over the rotor area directly from the wind field.

Simulation Results

Simulations are done in Flex5 with full stochastic wind fields and a Senvion 3.4M104 wind turbine model. Damage equivalent loads are calculated for IEC2A. IPC is only active above rated wind speed.

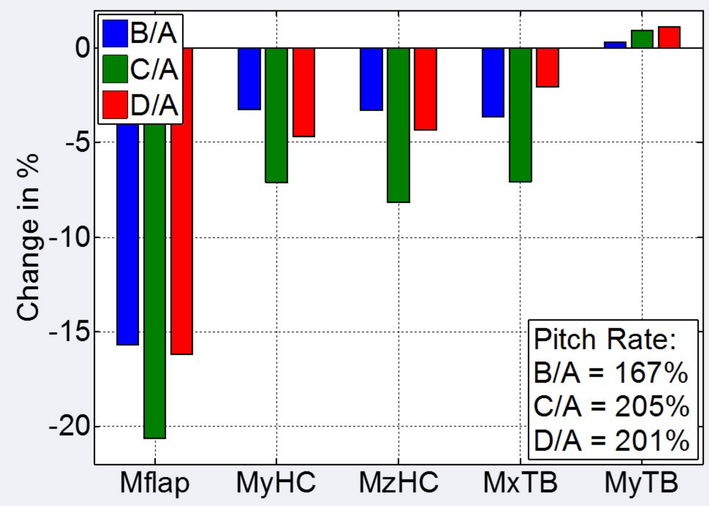

A Baseline collective pitch controller (BL)
B FB IPC with cyclic 1P + BL
C Lidar-assisted FF IPC, ideal meas. in rotor area + BL
D Lidar-assisted FF IPC, realistic meas. and wind field reconstruction + BL

Mflap	Blade root flapwise
MyHC	Hub center tilt
MzHC	Hub center yaw
MxTB	Tower base lateral
MyTB	Tower base longitudinal

Conclusions

- The prediction of the wind field is very effective: IPC FF controllers considerably decrease substantial loads compared to the IPC FB controller. Although the IPC FF controllers have - in contrast to the IPC FB - no information about fluctuating loads not caused by the wind field, e.g. rotor imbalance.
- Obviously for the realistic IPC FF controller the load reductions are smaller, but still in the range of or even stronger than reductions with a IPC FB controller.
- Further load reductions with an improved IPC FF controller including more statistic (e.g. yawed inflow) and deterministic (e.g. tower shadow) effects and/ or future sophisticated lidar trajectories are probable.
- Depending on intended applications advantages of lidar resp. blade root measurment could be evaluated by comparing various additional strategies:
  - Lidar-assisted IPC plus CPC feedforward controller
  - 1P, 2P and xP feedback controller

Acknowledgment

This work is carried out in the framework of the research project "Triple-I Blade Control" by Senvion GmbH in cooperation with TUDA and SWE. Part of this research is funded by the German Federal Ministry for Economic Affairs and Energy.

References of Full Paper

[1] Caselitz, P., Kleinkauf, W., Krüger, T., Petschenka, J., Reichardt, M., and Störzel, K.; "Reduction of fatigue loads on wind energy converters by advanced control methods" EWEC, 1997.
[2] Bossanyi, E. A.; "Further Load Reductions with Individual Pitch Control", Wind Energy, Vol. 8, 2005, pp. 481-485.
[3] Geyler, M., and Caselitz, P.; "IPC design for load reduction on large WEA", EWEC, 2007.
[4] Bossanyi, E. A.; "Controller field test on the NREL CART3 turbine", UpWind, 2011.
[5] Schlipf, D., Schuler, S., Grau, P., Allgöwer, F., and Kühn, M.; "Look-Ahead Cyclic Pitch Control Using LIDAR"; Conference on the science of making torque from wind, 2010, pp. 647-653.
[6] Kapp, S., Hess, F., and Kühn, M.; "Sensitivity of Lidar Measurement Chain Uncertainties on Wind Turbine Load Reductions Applying Feedforward Pitch Control", EWEA, 2013.
[7] Laks, J., Pao, L., Wright, A., Kelley, and Jonkman, B.; "The use of preview wind measurements for blade pitch control" Mechatronics, Vol. 21, No. 4, 2011, pp. 682-690.
[8] Dunne, F., Schlipf, D., and Pao, L.; "Comparision of two independent LiDAR-Based Pitch Control Designs" NREL, 2012.
[9] Haizmann, F., Schlipf, D., and Cheng, P. W., "Correlation-Model of Rotor-Effective Wind Shears and Wind Speed for Lidar-Based Individual Pitch Control" DEWEK, 2015.
[10] Bossanyi, E. A.; "Individual Blade Pitch Control for Load Reduction", Wind Energy, Vol. 6, 2003, pp. 119–128.